Confidential

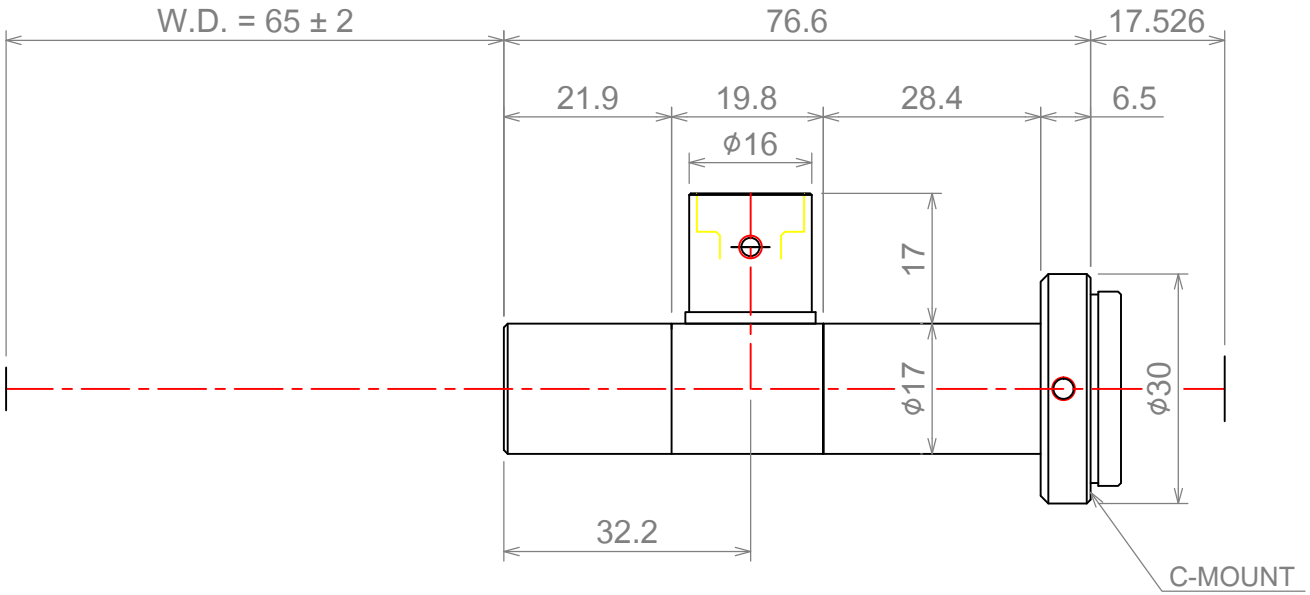

TITLE	UNIT	mm
LFTC1.5X-65C-8	SCALE	N／S
	TOL.	± 2%

L-Fusion Optics Inc.

Optical Magnification : 1.5X
W.D. : 65mm ± 2mm
N.A. : 0.048 , Resolution : 6.99um
Effective F/# : 15.6 , D.O.F. : 554um(COC: 40um)
Optical Distortion : < 0.06%
Telecentric Angle : < 0.05 deg.
F.O.V. : 4.27 X 3.2mm @ 1/2 inch CCD